YINGJIAO®

YEP75 SERIES 75W



YEP series are designed with lower profile housing and for wide range AC input from 90 VAC to 305V AC.

The series have build-in active function and operate for the temperature up to 70℃.

The good performance can be used for industrial automation & control systems, varied equipments etc.

Features

- Universal AC Input/ Full Range
- Built-in Active PFC Function
- Built-in Remote ON-OFF Control
- Higher Efficiency
- Protection:Short Circuit/Overload/ Over Voltage/Over Temperature
- Three Years Warranty

Model Information

Yingjiao Part number	DC VOLTAGE	RATED CURRENT	RATED POWER	VOLTAGE ADJ. RANGE	Max.Capacitive Load
YEP75-5	5V	15A	75W	4.75~5.5V	10000uF
YEP75-12	12V	6.3A	75.6W	11.4~13.2V	6000uF
YEP75-15	15V	5A	75W	14.3~16.5V	5000uF
YEP75-24	24V	3.2A	76.8W	22.8~26.4V	1500uF
YEP75-48	48V	1.6A	76.8W	45.6~52.8V	680uF

Input

VOLTAGE RANGE	90-305VAC/127-430VDC	
FREQUENCY RANGE	47-63Hz	
POWER FACTOR(Typ.)	PF>0.93/230VAC at full load	
	PF>0.98/115VAC at full load	
AVERAGE EFFICIENCY	82%	YEP75-5
	85%	YEP75-12
	86%	YEP75-15
	87%	YEP75-24
	89%	YEP75-48
AC CURRENT(Typ.)	0.9A/115VAC	
	0.5A/230VAC	
INRUSH CURRENT(Typ.)	COLD START 35A/230VAC	
LEAKAGE CURRENT	<2mA/240VAC	

Output

RIPPLE & NOISE(max.)	80mVp-p	YEP75-5
	120mVp-p	YEP75-12
	120mVp-p	YEP75-15
	120mVp-p	YEP75-24
	120mVp-p	YEP75-48
VOLTAGE TOLERANCE	±2.0%	YEP75-5
	±2.0%	YEP75-12
	±2.0%	YEP75-15
	±1.0%	YEP75-24
	±1.0%	YEP75-48
LINE REGULATION	±0.5%	
LOAD REGULATION	±1.0%	YEP75-5
	±0.5%	YEP75-12
	±0.5%	YEP75-15
	±0.5%	YEP75-24
	±0.5%	YEP75-48
SETUP, RISE TIME	600ms, 30ms at full load	
HOLD UP TIME(Typ.)	16ms at full load	

Protection

SHORT CIRCUIT	Protection type: Hiccup mode, recovers automatically after fault condition is removed
OVER LOAD	105%-135% Rated Output Power Protection type: Constant current limiting, recovers automatically after fault condition is removed.
OVER VOLTAGE	5V:5.75~ 6.75V 12V:13.2 ~ 16.2V 15V:16.5 ~ 20.25V 24V:26.4 ~ 32.4V 48V:52.8~ 64.8V Protection type : Shut down o/p voltage, re-power on to recover.
OVER TEMPERATURE	Protection type : Shut down o/p voltage, recovers automatically after temperature goes down.

Environment

WORKING TEMP.	-25℃ to +70℃ (Refer to "Derating Curve")
WORKING HUMIDITY	20 ~ 90% RH non-condensing
STORAGE TEMP., HUMIDITY	-40℃ to +85℃, 10 ~ 95% RH non-condensing
TEMP. COEFFICIENT	±0.05%/℃ (0~50℃)
VIBRATION	10 ~ 500Hz, 2G 10min./1cycle, 60min. each along X, Y, Z axes
OVER VOLTAGE CATEGORY	Ⅲ; According to EN61558, EN50178, EN60664-1, EN62477-1; altitude up to 2000 meters
MTBF	280K hrs min. MIL-HDBK-217F(25℃)
SAFETY PROTECTION	CLASS I

Safety & EMC

SAFETY STANDARDS	UL62368-1, BS EN/EN62368-1, BS EN/EN61558-1
WITHSTAND VOLTAGE	I/P-O/P:4KVAC I/P-FG:2KVAC O/P-FG:0.5KVAC
ISOLATION RESISTANCE	I/P-O/P, I/P-FG, O/P-FG:100M Ohms / 500VDC / 25℃ / 70% RH
EMC EMISSION	Compliance to BS EN/EN55032 (CISPR32) Class B,
	BS EN/EN61000-3-2 Class A,BS EN/EN61000-3-3
EMC IMMUNITY	Compliance to BS EN/EN61000-4-3,11 Criteria B
	BS EN/EN61000-4-2,4,5,6,8 Criteria A

Function

REMOTE CONTROL	CN: < 0~0.8VDC POWER ON , 4~10VDC POWER OFF

Note

1.All parameters NOT specially mentioned are measured at 230VAC input, rated load and 25℃ of ambient temperature.

2.Ripple&noise are measured from peak to peak with band width limit of 20MHz(0.1uf and 47uf /50V parallel capacitor under DC output full load, AC nominal input 25℃ ambient temperature).

3.Derating may be needed under low input voltages. Please check the derating curve for more details.

4.The power supply is considered a component which will be installed into a final equipment. The final equipment must be re-confirmed that it still meets EMC directives. For guidance on how to perform these EMC tests, please refer to "EMI testing of component power supplies."

5.The ambient temperature derating of 3.5 ℃/1000m with fanless models for operating altitude higher than 2000m(6500ft).

Dimensions & Weight

Length:	159mm / 6.26in
Width:	97mm / 3.82in
Height:	30mm /1.18in
Weight:	440g

Packing

Carton Size:	36 x 31.5 x 17.5 CM 14.17 x 12.40 x 6.89 in
Master Carton Quantities:	30pcs / Carton

Mechanical Specification

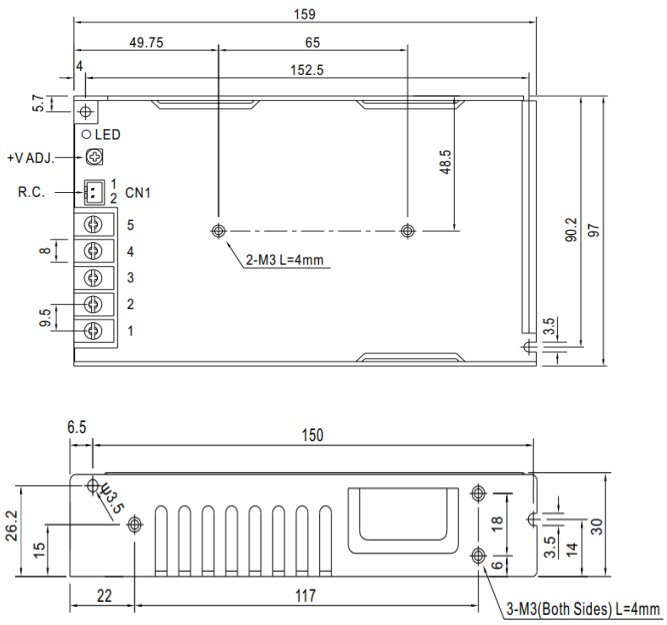

Input

No.	Description
1	AC/L
2	AC/N
3	FG ⏚

Output

No.	Description
4	DC OUTPUT -V
5	DC OUTPUT +V

Remote ON/OFF(CN): JST S2B-XH or equivalent(optional)

No.	Description	Mating Housing	Terminal
1	RC+	JST XHP or equivalent	JST SXH-001T-P0.6 or equivalent
2	RC-		

Screw Spec.	L(max)	Torque(max)
M4	4mm	0.9N·m

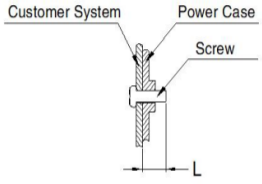

Note:
Unit: mm[inch]
Wire range: 22-12AWG
Connector tightening torque: M3.5 , 0.8N·m
General tolerances: ±1.00[±0.039]

Block Diagram

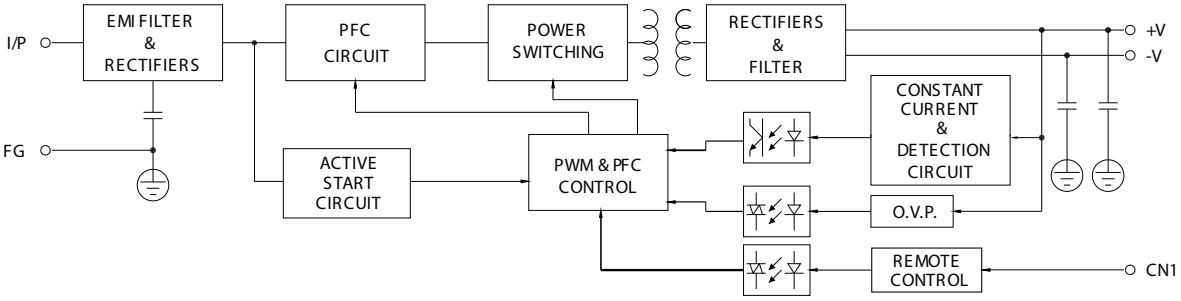

Deduction curve and temperature

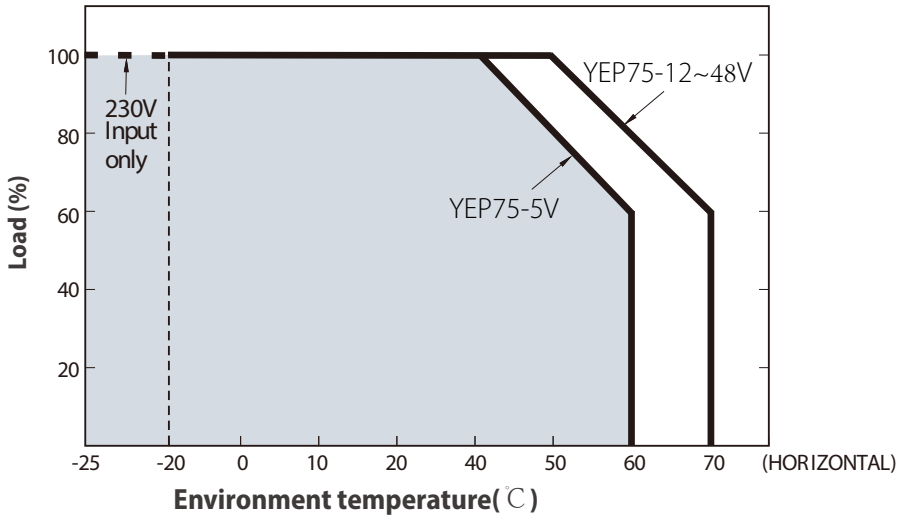

Minus output and input voltage curves

